Standard P&ID for Column Cells with Cavitation System

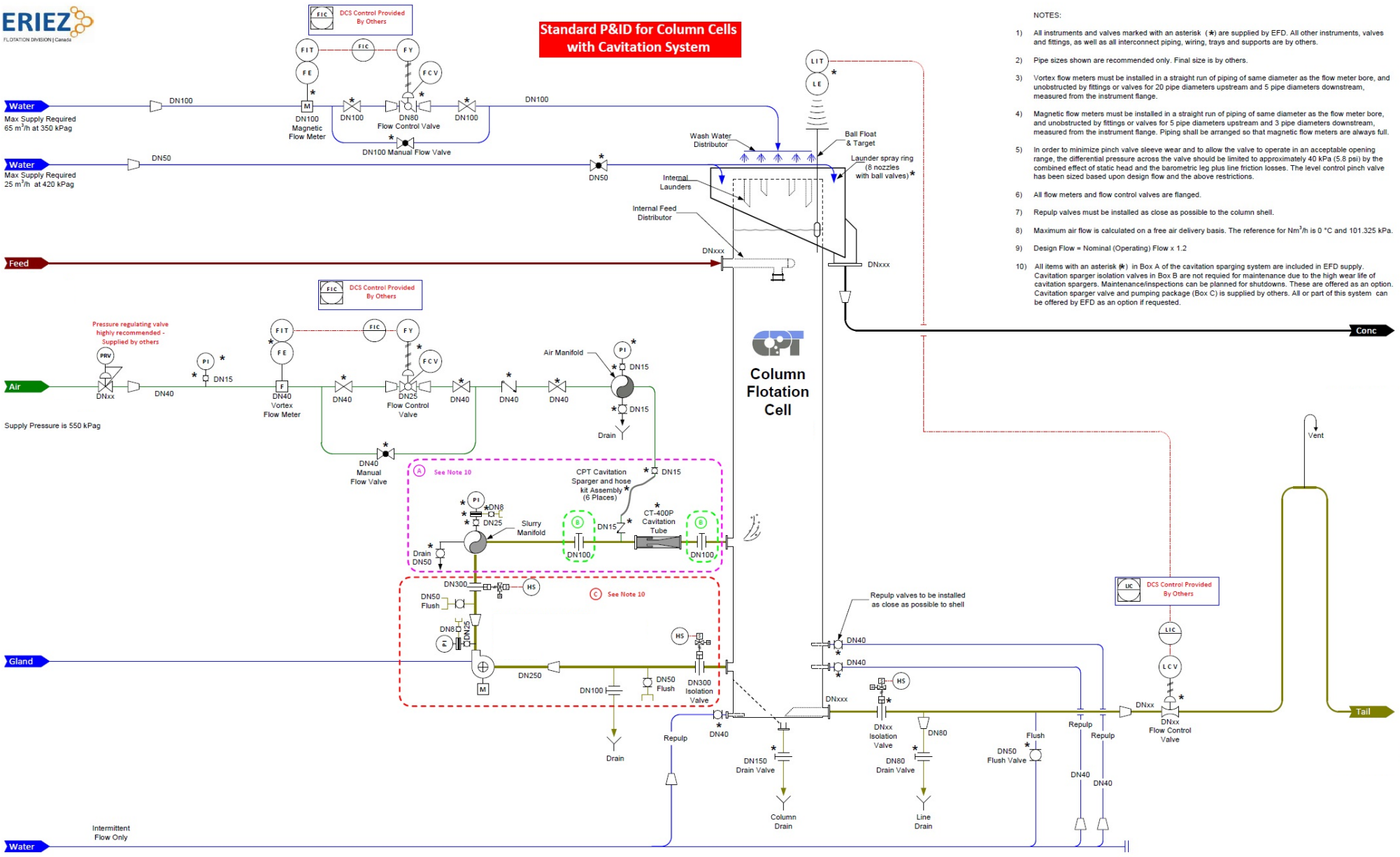

NOTES:

1) All instruments and valves marked with an asterisk (*) are supplied by EFD. All other instruments, valves and fittings, as well as all interconnect piping, wiring, trays and supports are by others.

2) Pipe sizes shown are recommended only. Final size is by others.

3) Vortex flow meters must be installed in a straight run of piping of same diameter as the flow meter bore, and unobstructed by fittings or valves for 20 pipe diameters upstream and 5 pipe diameters downstream, measured from the instrument flange.

4) Magnetic flow meters must be installed in a straight run of piping of same diameter as the flow meter bore, and unobstructed by fittings or valves for 5 pipe diameters upstream and 3 pipe diameters downstream, measured from the instrument flange. Piping shall be arranged so that magnetic flow meters are always full.

5) In order to minimize pinch valve sleeve wear and to allow the valve to operate in an acceptable opening range, the differential pressure across the valve should be limited to approximately 40 kPa (5.8 psi) by the combined effect of static head and the barometric leg plus line friction losses. The level control pinch valve has been sized based upon design flow and the above restrictions.

6) All flow meters and flow control valves are flanged.

7) Repulp valves must be installed as close as possible to the column shell.

8) Maximum air flow is calculated on a free air delivery basis. The reference for Nm^3/h is 0 °C and 101.325 kPa.

9) Design Flow = Nominal (Operating) Flow x 1.2

10) All items with an asterisk (*) in Box A of the cavitation sparging system are included in EFD supply. Cavitation sparger isolation valves in Box B are not requied for maintenance due to the high wear life of cavitation spargers. Maintenance/inspections can be planned for shutdowns. These are offered as an option. Cavitation sparger valve and pumping package (Box C) is supplied by others. All or part of this system can be offered by EFD as an option if requested.